24GE3251 - ENGINEERING GRAPHICS IMPORTANT QUESTIONS

UNIT I: PLANE CURVES Basic Geometrical constructions, Curves used in engineering practices: Conics — Construction of ellipse, parabola and hyperbola by eccentricity method — Construction of cycloid — construction of involutes of square and circle — Drawing of tangents and normal to the above curves.	
Q. No.	**Questions**
1.	Construct an ellipse, with distance of the focus from the directrix as **50 mm** and eccentricity as **2/3**. Also draw normal and tangent to the curve at a point **40 mm** from the directrix.
2.	Draw the locus of a point **P** which moves in a plane in such a way that the ratio of its distances from a fixed-point **F** and fixed straight-line DD_1 is always **2/3**. The distance between the fixed-point **F** and the fixed straight line is **50 mm**. also draw a tangent and normal on a point on the locus at a horizontal distance of **40 mm** from the fixed straight line.
3.	Draw an ellipse given the following: (i) Distance of the focus from the directrix is **60 mm** (ii) Eccentricity is **3/4**. Also draw the tangent and normal to any point **P** on the ellipse.
4.	A fixed point is **50 mm** from a fixed straight line. Draw the locus of a moving point **P** such that its distance from the fixed straight line is **1.5 times** the distance from the fixed point. Name the curve. Also, draw the tangent and normal to the curve at a point on it **20 mm** above the major axis.
4.	Trace the conic section when the distance between the focus and directrix is **50 mm** such that its distance from the fixed straight line is **equal** to the distance from the fixed point. Name the curve. Draw a normal and tangent at a point at horizontal distance of **40 mm** from the directrix.
5.	Construct a parabola when the distance between the focus and directrix is **60 mm**. Also draw the tangent and normal to any point on the curve.
6.	The vertex of a hyperbola is **60 mm** from its focus. Draw the curve, if the eccentricity is **3/2**. Draw a normal and a tangent at a point on the curve, **75 mm** from the directrix.
7.	Construct a hyperbola when the distance between the focus and directrix is **55 mm** and eccentricity is **3/2**. Also draw the tangent and normal to any point on the curve.
8.	Construct a cycloid given the diameter of the generating circle is **40 mm**. Also, draw a tangent and normal at any point **P** on the cycloid.
9.	A circle of **50 mm** diameter rolls along a line. A point on the circumference of the circle is in contact with the line in the beginning and after one complete revolution. Draw the cycloidal path of the point. Draw a tangent and normal at any point on the curve.
10.	A circle of diameter **50 mm** rolls on the outside of another circle of diameter **180 mm** without slipping. Draw the path traced by a point on the smaller circle. Also draw a tangent and a normal at any point **P** on the curve.

11.	A circle of diameter **50 mm** rolls along the inside of another circle of diameter **200 mm** without slipping. Draw the path traced by a point on the smaller circle. Also draw a tangent and a normal at any point **P** on the curve.
12.	Draw the involute of a square of side **30 mm**. Draw the tangent and normal at any point on the curve.
13.	Draw the involute of a circle of diameter **40 mm**. Draw a tangent and normal to the curve at a distance of **95 mm** from the centre of the circle
14.	Construct one convolution of an involute of a circle of diameter **25 mm**. Draw the tangent and normal at a point on the involute **45 mm** distant from the centre of the circle.
15.	Draw the involute of a circle of diameter **40 mm**. Also, draw a tangent and normal at any point **P** on the involute.

UNIT II: PROJECTION OF POINTS, LINES AND PLANE SURFACE

Orthographic projection- principles-Principal planes -First angle projection-projection of points. Projection of straight lines (only First angle projections) inclined to both the principal planes - Determination of true lengths and true inclinations by rotating line method and traces. Projection of planes (polygonal and circular surfaces) inclined to both the principal planes by rotating object method.

Q. No.	Questions
1.	Draw the projection of the following points. Give **30 mm** space between each projector with proper dimensions. **A** is **35 mm** above **HP** and **45 mm** in front of **VP**. **(5)** **B** is **40 mm** above **HP** and in **VP**. **(5)** **C** is in **HP** and **45 mm** in front of **VP**. **(5)** **D** is in both **HP** and **VP**. **(5)**
2.	A line **PQ**, **70 mm** long is parallel to **HP** and inclined at **30°** to the **VP**. The end **P** is **mm** above **HP** and **40 mm** in front of **VP**. Draw the projection of the line.
3.	A straight line **AB** has its end **A**, **15 mm** above **HP** and **20 mm** in front of **VP**. The end **B** is **40 mm** above **HP** and **45 mm** in front of **VP**. Draw its projections when the distance between the end projectors is **50 mm**. Also find the true length of the line and its true inclination with the **HP** and **VP**.
4.	A line **AB 55 mm** long has its end **A 35 mm** in front of **VP** and **25 mm** above **HP**. The line is inclined at **40°** to **HP** and **30°** to **VP**. Draw its projections.
5.	A line **NS 80 mm** long has its end **N**, **10 mm** above the **HP** and **15 mm** in front of the **VP**. The other end **S** is **65 mm** above the **HP** and **50 mm** in front of the **VP**. Draw the projections of the line and find its true inclination with the **HP** and **VP**.
6.	A line **EF**, **85 mm** long has its end **E**, **25 mm** above the **HP** and **20 mm** in front of the **VP**. The top and front views of the line have lengths of **55 mm** and **70 mm** respectively. Draw the projections of the line and find its true inclination with the **HP** and **VP**
7.	The end **P** of a line **PQ**, **70 mm** long is **15 mm** above the **HP** and **20 mm** in front of the **VP** **Q** is **40 mm** above the **HP**. The top view of a line is inclined at **45º** to the **VP**. Draw the projections of the line and find its true inclination with the **HP** and **VP**

8.	A front view of a line **AB 80 mm** long is inclined at **45º** to **XY** line. The front view measures **60 mm** long. Point **A** is located **20 mm** above **HP** and is in **VP**. Draw the projection and find its true inclinations.
9.	An equilateral triangular plate **PQR** of side **60 mm** is so placed that the side **PQ** is resting on the **HP** and inclined at **40°** to the **VP**. The difference in height between **R** and **P** is **30 mm**. Draw the projections of the triangular plate.
10.	A circular plate of diameter **70 mm** has the end **P** of the diameter **PQ** in the **HP** and the plate is inclined at **40°** to the **HP**. Draw its projections when the diameter **PQ** appears to be inclined at **45°** to the **VP** in the top view.
11.	A square lamina **PQRS** of side **40 mm** rests on the ground on its corner **P** in such a way that the diagonal **PR** is inclined at **45°** to the **HP** an apparently inclined at **30°** to the **VP**. Draw its projections.
12.	A rectangular plate measuring **55 x 30 mm** is resting on its shorter side on **HP** inclined at angle of **30°** to the **VP**. Its surface is inclined at **60°** to the **HP**. Draw its projections.
13.	A regular pentagonal plate of side **30 mm** rests on the ground on one of its corners with the sides containing the corner being equally inclined to the ground. The side opposite to the corner on which it rest is inclined at **30°** to **VP** and is parallel to the **HP**. The surface of the plate makes **50°** with the ground. Draw the top and front views of the plate.
14.	A pentagonal lamina of side **35 mm** rests on one of its corners on **VP**. The edge opposite to that corner makes an angle of **30°** to the **HP**. The surface of the lamina is inclined at **40°** to the **VP**. Draw its projection.
15.	A hexagonal lamina of side **35 mm** rests on one of its edges on the **HP**. This edge is parallel to the **VP**. The surface of the lamina is inclined at **60°** to the **HP**. Draw the projections.
16.	A hexagonal plate of side **20 mm** rests on the **HP** on one of its sides inclined at **45°** to the **VP**. The surface of the plate makes an angle of **30°** with the **HP**. Draw the front and top views of the plate.

UNIT III: PROJECTION OF SOLIDS AND FREEHAND SKETCHING

Projection of simple solids like prisms, pyramids, cylinder, cone and truncated solids when the axis is inclined to one of the principal planes and parallel to the other by rotating object method. Visualization concepts and Free Hand sketching: Visualization principles —Representation of Three Dimensional objects — Layout of views- Freehand sketching of multiple views from pictorial views of objects.

Q. No.	Questions
1.	A square pyramid with a base side of **60 mm** and altitude **100 mm** lies on **HP** on one of its triangular faces with its axis parallel to **VP**. Draw its projections.
2.	A cylinder of base diameter **30 mm** and axis length **50 mm** is resting on **HP** on a point so that its axis is inclined at **45º** to **HP** and parallel to **VP**. Draw its projections
3.	A cone of base diameter of **40 mm** and altitude **80 mm** is rests on **HP** with its axis inclined at **30°** to **HP** and parallel to **VP**. Draw its projections.

4.	A pentagonal pyramid with a base side of **25 mm** has an altitude of **45 mm**. The pyramid rests on the **HP** on one of the base sides such that the triangular face containing that side is perpendicular to both the **HP** and **VP**. Draw its projections.
5.	A pentagonal prism of the base side **25 mm** and axis length **55 mm** rests on **HP** on one of its base corners with the base edges containing the corner being equally inclined to **HP**. The axis is inclined at **45°** to **HP** and parallel to the **VP**. Draw its projections by change of position method.
6.	A hexagonal prism of the base side **30 mm** and axis length **60 mm** rests on the **HP** on one of its base edges with its axis inclined at **60°** to **HP** and parallel to the **VP**. Draw its front and top views.
7.	A hexagonal pyramid of base edge **40 mm** and altitude **80 mm** is rests on one of its base edges on the **HP** with its axis inclined at **30°** to the **HP** and parallel to the **VP**. Draw its top and front views.
8.	Draw the projections of a cone of base diameter **50 mm** and axis length **70 mm** when it lies on the ground on one of its generators with the axis parallel to the **VP**.
9.	A hexagonal pyramid of base side **25 mm** and axis height **60 mm** is freely suspended from one of its base corners, such that the axis is parallel to the **VP**. Draw the projections of the solid.
10.	A hexagonal prism of side of base **25 mm** and axis **50 mm** long is freely suspended from a corner of one end such that its axis is parallel to the vertical plane. Draw its projections by change of position method.
11.	A cone of base diameter of **40 mm** and height **56 mm** is freely suspended from one of its base points such that its axis is parallel to the **VP**. Draw its projections.
12.	A hexagonal pyramid of base side **30 mm** and altitude **75 mm** rests on the **HP** on one of its base edges such that the triangular face containing the resting edge is perpendicular to both **HP** and the **VP**. Draw its projections.
13.	A pentagonal pyramid of base edge **25 mm** and altitude **60 mm** rests on the base side in **HP**, such that the highest base corner is **20 mm** above **HP**. Its axis is parallel to the **VP**. Draw its top and front views.
14.	Draw three views of the blocks shown pictorially in figure according to first angle projection. 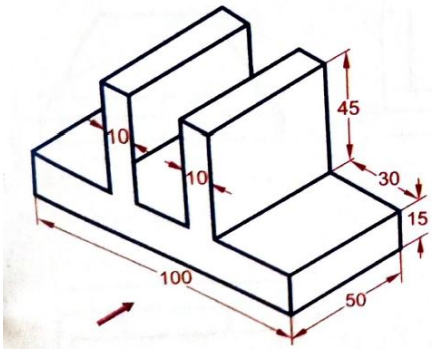

15.	Draw three views of the blocks shown pictorially in figure according to first angle projection. 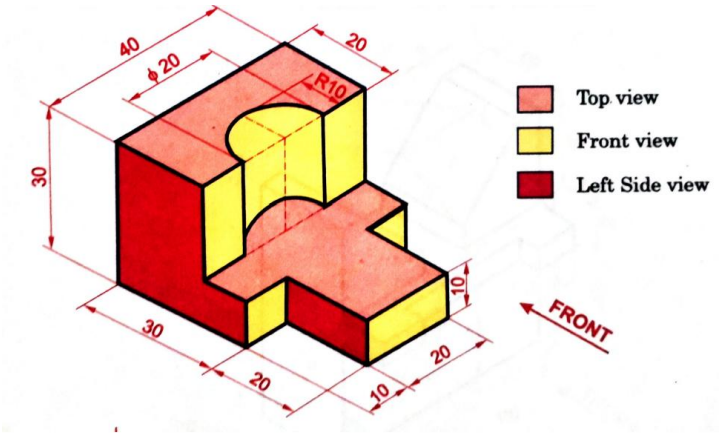
16.	Draw three views of the blocks shown pictorially in figure according to first angle projection 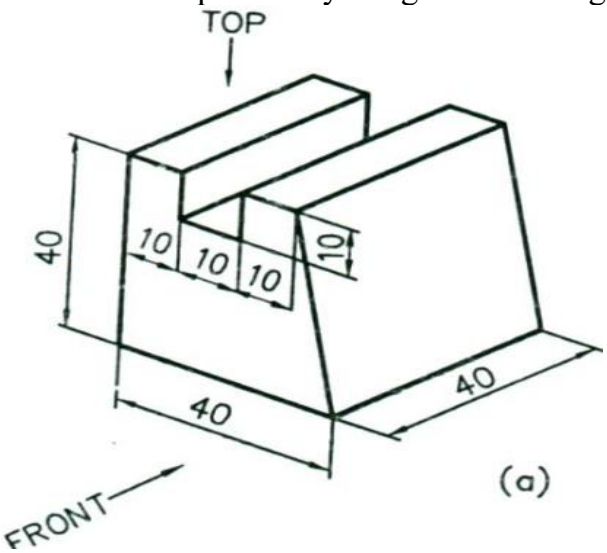
17.	Draw three views of the blocks shown pictorially in figure according to first angle projection 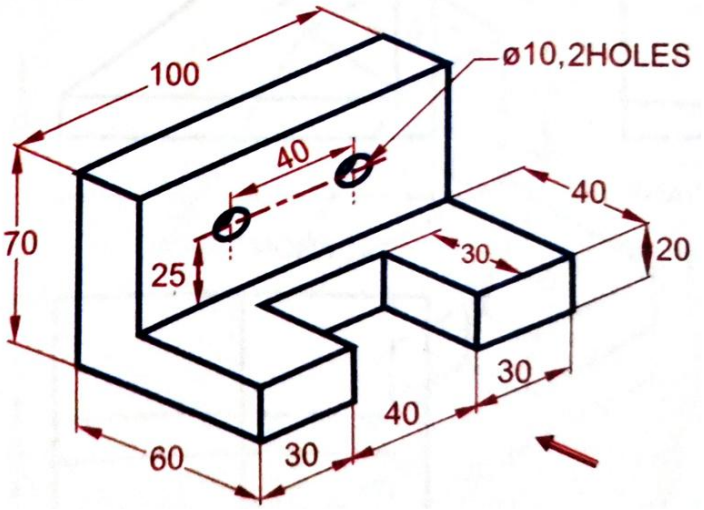

18.	Draw three views of the blocks shown pictorially in figure according to first angle projection 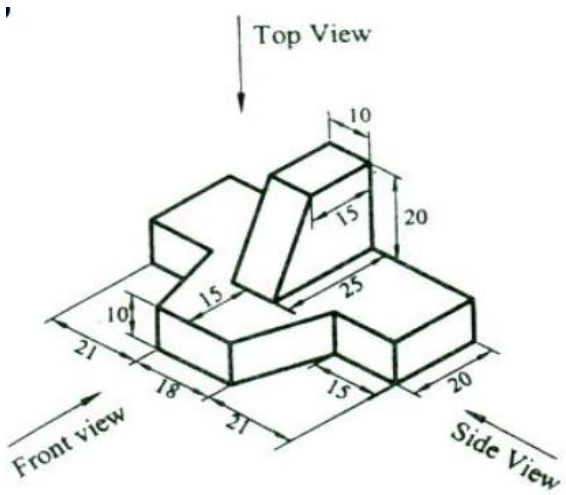
19.	Draw three views of the blocks shown pictorially in figure according to first angle projection 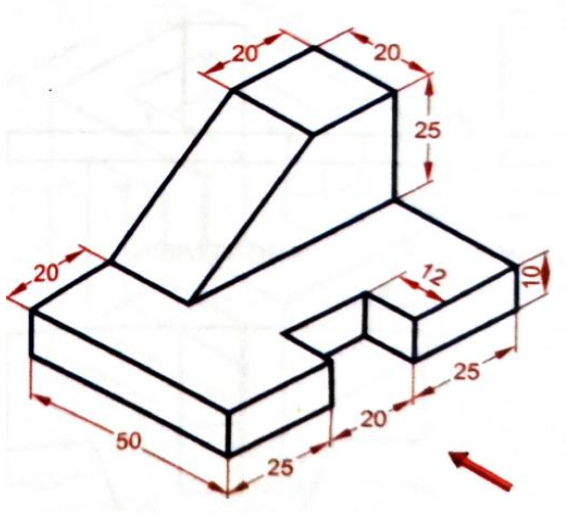
20.	Draw three views of the blocks shown pictorially in figure according to first angle projection 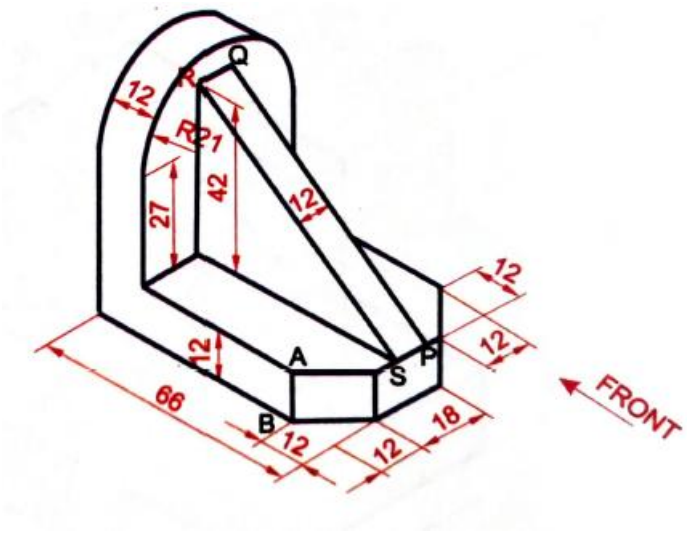

UNIT IV: PROJECTION OF SECTIONED SOLIDS AND DEVELOPMENT OF SURFACES Sectioning of above solids in simple vertical position when the cutting plane is inclined to the one of the principal planes and perpendicular to the other — obtaining true shape of section. Development of lateral surfaces of simple and sectioned solids — Prisms, pyramids cylinders and cones.	
Q. No.	**Questions**
1.	A cone of base diameter **50 mm** and altitude **60 mm** rests on its base on the **HP**. It is cut by a plane perpendicular to the **VP** and parallel to one of the extreme generators, **10 mm** away from it. Draw the sectional top view and true shape of the section.
2.	A pentagonal pyramid of base side **40 mm** and altitude **80 mm** rests on the **HP** on its base with an edge of the base parallel to the **VP**. It is cut by a vertical plane inclined at **45°** to the **VP** at a distance **10 mm** from the axis. Draw the sectional front view, top view and the true shape of the section.
3.	A cube of side **25 mm** rests on the **HP** on one of its faces with a vertical face inclined at **35°** to the **VP**. It is cut by a plane perpendicular to the **VP** and inclined at **35°** to the **HP** and meeting the axis at **20 mm** above the **HP**. Draw the front view, sectional top view and the true shape of the section.
4.	A hexagonal pyramid of base side **25 mm** and axis **55 mm** rests on its base on the **HP** with two base edges perpendicular to the **VP**. It is cut by a plane perpendicular to the **VP** and inclined at **30°** to the **HP** meeting the axis at **20 mm** from the vertex. Draw the front view, sectional top view and the true shape of the section.
5.	A tetrahedron of side **60 mm** is resting on **HP** on one of its faces such that one of the edges of the resting face is perpendicular to the **VP**. It is cut by a plane perpendicular to the **VP** and inclined to **HP** in such a way that the true shape of the section is an isosceles triangle of base **40 mm** and altitude **30 mm**. Find the inclination of the cutting plane with the **HP**. Also draw the front view, sectional top view and true shape of section.
6.	A hexagonal prism of base side **30 mm** and axis length **70 mm** rests on one of its ends on the **HP** with two base sides parallel to the **VP**. It is cut by a plane perpendicular to **VP** and inclined at **30°** to **HP**. The cutting plane meets the axis at **30 mm** from the top. Draw its front view, sectional top view and true shape of section,
7.	A pentagonal prism of base side **30 mm** and length **70 mm** is lying on the **HP** on one of its rectangular faces with its axis perpendicular to the **VP**. It is cut by a plane perpendicular to the **VP** and inclined at **45°** to the **HP**. The shortest distance between the axis and the cutting plane is **10 mm**. Draw its front view, sectional top view and true shape of section.

8.	A square prism of base side **40 mm** and axis length **50 mm** is resting on **HP** on its base with a side of base inclined at **35°** to **VP**. It is cut by a plane inclined at **30°** to **HP** and perpendicular to **VP** and is bisecting the axis. Draw the development of the remaining portion of the prism.
9.	A pentagonal prism of base side **25 mm** and height **55 mm** is cut by a plane perpendicular to **VP** and **30°** to **HP** and passing through the axis **30 mm** above the base. Draw the lateral development of the lower portion of the solid
10.	A hexagonal prism of base side **20 mm** and axis length **45 mm** is resting on one of its ends on the **HP** with two of its lateral faces parallel to **VP**. It is cut by a plane perpendicular to **VP** and inclined at **30°** to **HP**. The plane meets the axis at a distance **20 mm** above the base. Draw the development of the lateral surfaces of the lower portion of prism.
11.	A hollow pentagonal pyramid of base side **30 mm**, altitude **70 mm** has to be made with thick packing papers cut out of a single sheet and folded to the required form. The joints are formed with an overlap of **5 mm**. Draw the shape of the cut out sheet.
12.	A square pyramid of base side **25 mm** and altitude **50 mm** rests on its base on the **HP** with two sides of the base parallel to **VP**. It is cut by a plane bisecting the axis. The cutting plane is perpendicular to the **VP** and inclined at **30°** to the base. Draw the development of the lateral surfaces of lower part of the cut pyramid.
13.	A hexagonal pyramid of side of base **25 mm** and altitude **50 mm** is resting vertically on its base on the ground with two of the sides of the base perpendicular to the **VP** and inclined at **40°** to the **HP**. The plane bisects the axis of the pyramid. Draw the development of the lateral surfaces of the pyramid.
14.	A cone of base diameter **60 mm** and height **70 mm** rests vertically on its base on the ground. A string is wound around the curved surface of the cone starting from the left extreme point on the base and ending at the same point. Find the shortest length of the string required. Also, trace the path of the string in the front and top views.
15.	A hexagonal pyramid of base of side **30 mm** and height **50 mm** rests vertically on its base on the ground with two of its base sides parallel to the **VP**. It is cut by a plane inclined at **30°** to the **HP** and perpendicular to the **VP** and meeting the axis at a point **10 mm** below the vertex. There is also a circular slot of **30 mm** radius with the right corner of the base as centre. Draw the development of the lateral surfaces of the pyramid.
16.	A cone of base diameter **60 mm** and height **70 mm** is resting on its base on the ground. It is cut by a plane perpendicular to the **VP** and parallel to the **HP** at a distance **20 mm** from the vertex. It is also cut by a plane perpendicular to the **VP** and inclined at **40°** to the base and meeting the axis at a point **20 mm** above the base. Draw the development of the lateral surfaces of the cut cone.

UNIT V: ISOMETRIC AND PERSPECTIVE PROJECTIONS Principles of isometric projection — isometric scale - isometric projections of simple solids and truncated solids - Prisms, pyramids, cylinders, cones- combination of two solid objects in simple vertical positions - Perspective projection of simple solids-Prisms, pyramids and cylinders by visual ray method.	
Q. No.	**Questions**
1.	Draw the isometric view of a frustum of a hexagonal pyramid when it is resting on its base on the **HP** with two sides of the base parallel to the **VP**. The side of base is **20 mm** and top 8 **mm**. The height of the frustum is **55 mm**.
2.	A square pyramid of base side **25 mm** and axis height **50 mm** resting **HP** with its base. It is cut by a cutting plane inclined at **35°** to **HP** and bisecting the axis. Draw the isometric view.
3.	A pentagonal pyramid of base side **30 mm** and axis height **60 mm** rests with base on the ground with one of the base edges parallel to **VP**. It is cut by a horizontal plane at **30 mm** from the vertex. Draw the isometric view.
4.	A cylinder of base diameter **35 mm** and height **55 mm** resting on **HP** with its base. It is cut by a cutting plane, perpendicular to **VP** and inclined to **HP** at **45°** and meeting the axis at **15 mm** from the top end. Draw the isometric view of the truncated solid
5.	Draw the isometric view of a pentagonal pyramid, **30 mm** edge of base and **65 mm** height resting on **HP** such that an edge of the base is parallel to **VP** and nearer to it and cut by a section plane perpendicular to **VP** and inclined at **30°** to **HP** passing through a point on the axis at a height of **35 mm** from the base.
6.	A hexagonal prism, side of base **25 mm** and height **50 mm** rests on **HP** and one of the edges of its base is parallel to **VP**. A section plane perpendicular to **VP** and inclined at **50°** to **HP** bisects the axis of the prism. Draw the isometric view of the truncated prism, showing the cut surface.
7.	Draw the isometric view of a pentagonal prism of base side **30 mm** and axis **65 mm** long is resting on the ground on its base one of the edges of base is perpendicular to **VP**. The prism is cut by a plane perpendicular to **VP**, inclined at **60°** to **HP** and intersect the axis at **15 mm** from the top.
8.	A cone of base diameter **40 mm** and axis height **50 mm** resting on base. It is cut by section plane inclined at **45°** to **HP** and bisecting the axis. Draw the isometric view.
9.	A square lamina of **30 mm** side lies on the ground plane. One of its corners is touching the **PP** and an edge is inclined at **50°** to **PP**. The station point is **35 mm** in front of the **PP**, **50 mm** above **GP** and lies in a central plane which is at a distance of **30 mm** to the right of the corner touching the **PP**. Draw the perspective view of the square lamina.

10.	A square prism of base side **30 mm** and axis height **50 mm** is lying on the ground on its base with a face parallel to and **15 mm** behind **PP**. The station point is **40 mm** in front of **PP** and **60 mm** above **GP** and lies in a central plane passing through a point **25 mm** to the right of the right end of the prism. Draw the perspective projection of the prism.
11.	A cone of base diameter **50 mm** and axis height **60 mm** resting on ground with its base. The vertex of the cone is **30 mm** behind **PP**. The station point is **50 mm** to the right of the vertex, **40 mm** in front of **PP** and **70 mm** above **GP**. Draw the perspective view of the cone.
12.	A circle of diameter **30 mm** lies on the ground plane with its centre **25 mm** behind the picture plane. Draw its perspective view, if the station point is **45 mm** in front of the **PP** and **30 mm** above the ground and **40 mm** to the left of the centre of the circle.
1**3**.	A hexagonal prism of base side **20 mm** and height **50 mm** stands on its base on the ground with a base side parallel to the **PP** and **20 mm** behind the picture plane. The station point is **65 mm** above the ground and **55 mm** in front of **PP** and located at **30 mm** to the left of left extreme corner of the prism. Draw the perspective view of the prism.
14.	Draw the perspective view of a rectangular prism of **80 mm**x **40 mm** x **35 mm** lying on its **80 mm**x **40 mm** rectangular face on the ground plane with a vertical edge touching the picture plane and the end faces inclined at **60°** with the picture plane. The station point is **90 mm** in front of the picture plane, **70 mm** above the ground plane and it lies in a central plane with axis through the centre of the prism.